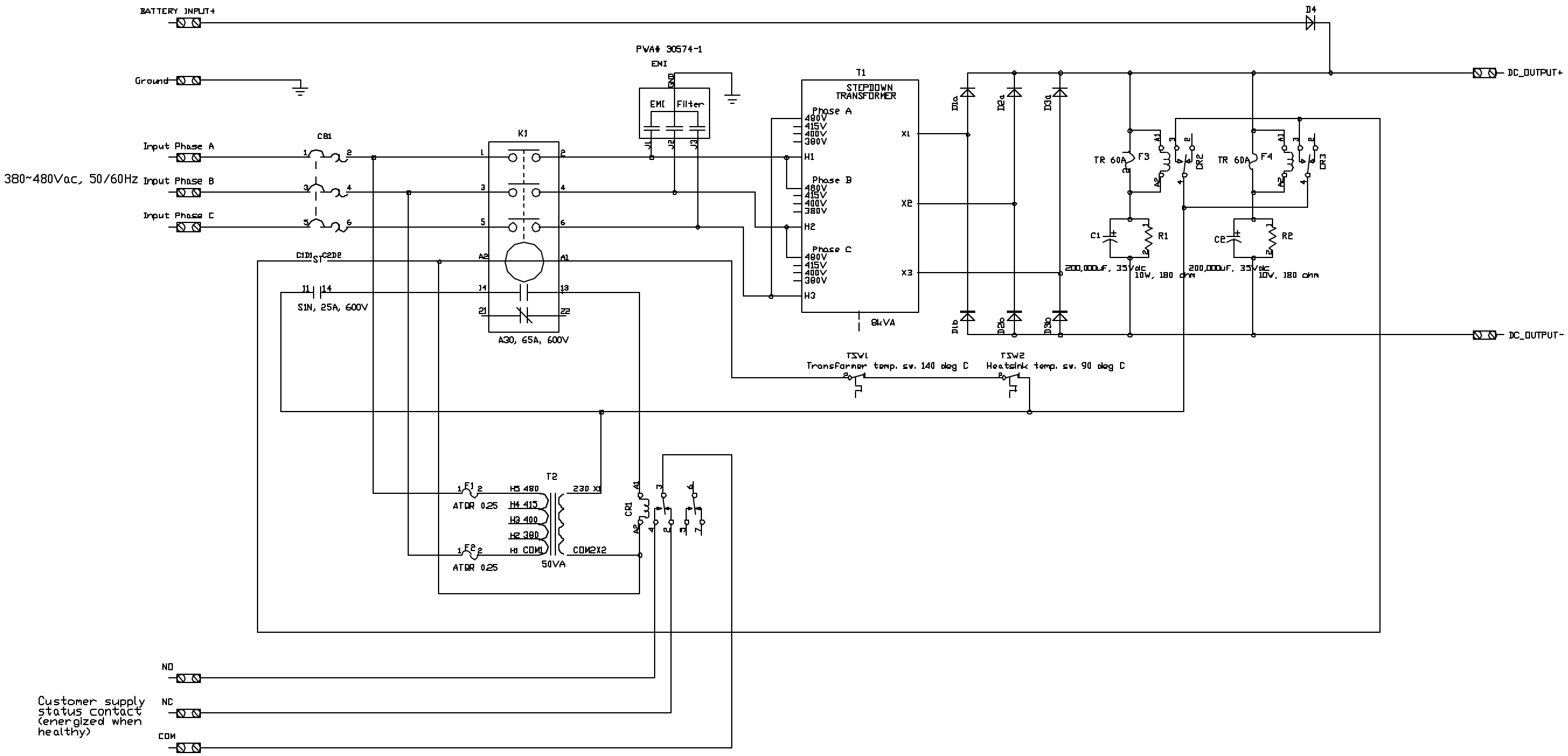

REV	DESCRIPTION	BY	DATE	APR
B	[illegible]	[illegible]	[illegible]	RR
A	[illegible]	[illegible]	[illegible]	RR

ACTIVE POWER, INC. CONFIDENTIAL: THIS DOCUMENT AND THE INFORMATION CONTAINED IN IT ARE CONFIDENTIAL, AND CANNOT BE COPIED OR DISCLOSED IN WHOLE OR IN PART WITHOUT THE EXPRESS WRITTEN CONSENT OF ACTIVE POWER, INC.

THIRD ANGLE PROJECTION

UNLESS OTHERWISE SPECIFIED ALL DIMENSIONS IN INCHES & INCLUDE FINISH. REMOVE BURRS AND SHARP EDGES. TOLERANCES ARE:

.XX: ±.03
.XXX: ±.010
ANGLES: ±.5°

MATERIAL: SEE NOTES
FINISH: SEE NOTES

DO NOT SCALE DRAWING

	APPROVALS	DATE
DRAWN	WH	7/1/2002
CHECKED		
ENGR	RR	7/1/2002
MFG		

TITLE: SUBMITTAL DRAWING ELECTRICAL SCHEMATIC GENSTART STARTING MODULE

SIZE: D | DWG. NO. 60600-AP | REV B

FILE | SCALE: NONE | SHEET 1 OF 1