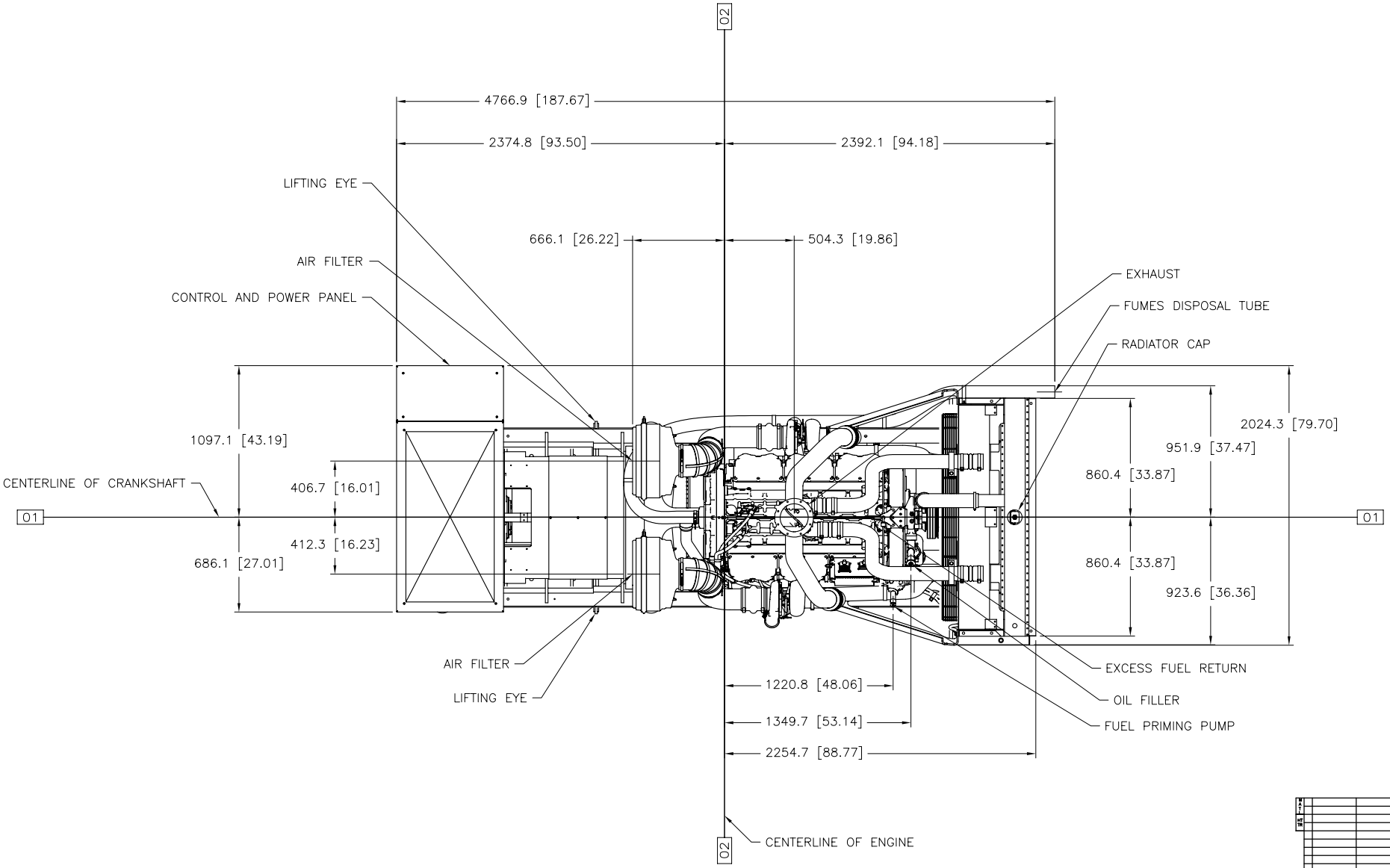

CAT C32 PACKAGE GENERATOR SET
DWG# 276-3027 CHG 00
METRIC [INCH]
TOP VIEW
GP-0620 CHG 03 SHOWN

1E2733 DRAWING-AUTOCAD		
1E0011 INTPR & TOL		
SPEC NO.	NAME	
DRN	A.W. SMITH	
CHK	M.R. PETERSON	
APPD	B.J. BROCK	
CONTROL	EXP / PRODUCTION / PROD X	

UNLESS OTHERWISE SPECIFIED
DIMENSIONS ARE IN MM [INCH]
DIMENSIONS W/O TOL ARE BASIC

SCALE 1 = 10
0 10mm 20 30
SHEET 5 OF 7
THIRD ANGLE PROJECTION
CHG 0015JUN05
DATE

CATERPILLAR INC.

THE INFORMATION HEREON IS THE PROPERTY OF CATERPILLAR INC. AND/OR ITS SUBSIDIARIES. WITHOUT WRITTEN PERMISSION, ANY ACTUAL, TRANSMITTAL, TO REPRODUCE, OR USE THE INFORMATION FOR OTHER THAN THE PURPOSE FOR WHICH IT IS FURNISHED.

INSTALLATION-ENGINE
PACKAGE GENERATOR SET

276-3027 | VER – | DES SUB | CONTROL W982 | E